Cambridge International AS & A Level

Cambridge International Examinations
Cambridge International Advanced Subsidiary and Advanced Level

CANDIDATE NAME

CENTRE NUMBER | | | | | |

CANDIDATE NUMBER | | | | |

5053572589

PHYSICS **9702/31**

Paper 3 Advanced Practical Skills 1 **May/June 2014**

2 hours

Candidates answer on the Question Paper.

Additional Materials: As listed in the Confidential Instructions.

READ THESE INSTRUCTIONS FIRST

Write your Centre number, candidate number and name on all work you hand in.
Write in dark blue or black pen.
You may use an HB pencil for any diagrams or graphs.
Do not use staples, paper clips, glue or correction fluid.
DO **NOT** WRITE IN ANY BARCODES.

Answer **both** questions.
You will be allowed to work with the apparatus for a maximum of one hour for each question.
You are expected to record all your observations as soon as these observations are made, and to plan the presentation of the records so that it is not necessary to make a fair copy of them.
You are reminded of the need for good English and clear presentation in your answers.

Electronic calculators may be used.
You may lose marks if you do not show your working or if you do not use appropriate units.

Additional answer paper and graph paper should be used only if it becomes necessary to do so.

At the end of the examination, fasten all your work securely together.
The number of marks is given in brackets [ ] at the end of each question or part question.

For Examiner's Use	
1	
2	
Total	

This document consists of **12** printed pages.

© UCLES 2014

CAMBRIDGE International Examinations

You may not need to use all of the materials provided.

1 In this experiment, you will investigate a system in equilibrium due to several forces.

(a) Measure and record the distance L_0 between the ends of the spring, as shown in Fig. 1.1. **Note that this distance includes the two loops at the ends.**

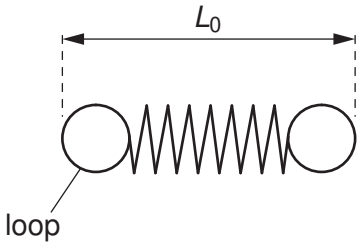

Fig. 1.1

L_0 = ...m [1]

(b) **(i)** Set up the apparatus as shown in Fig. 1.2. Mass m should be 0.200 kg. **Do not change the height of the pulley or the clamp.**

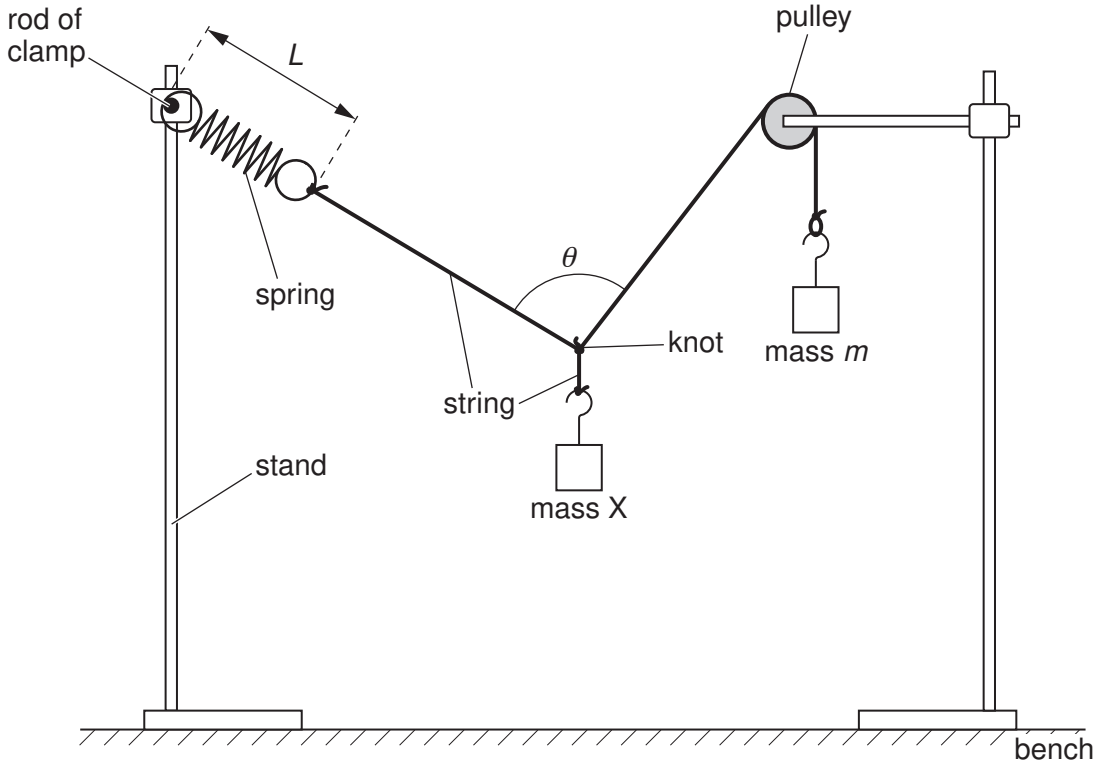

Fig. 1.2

(ii) Adjust the apparatus until the angle θ is 90°.

You may move the stands **sideways** or slide the knot along the string.

(iii) Measure and record the distance L between the ends of the spring loops.

L = ...m [1]

(iv) Calculate the extension e of the spring using $e = L - L_0$.

e = ...m

(c) Vary m and repeat **(b)(ii)**, **(b)(iii)** and **(b)(iv)** until you have six sets of readings of m and L.

Include values of m^2, e and e^2 in your table.

[10]

(d) **(i)** Plot a graph of e^2 on the y-axis against m^2 on the x-axis. [3]

(ii) Draw the straight line of best fit. [1]

(iii) Determine the gradient and y-intercept of this line.

gradient = ...

y-intercept = ...

[2]

© UCLES 2014

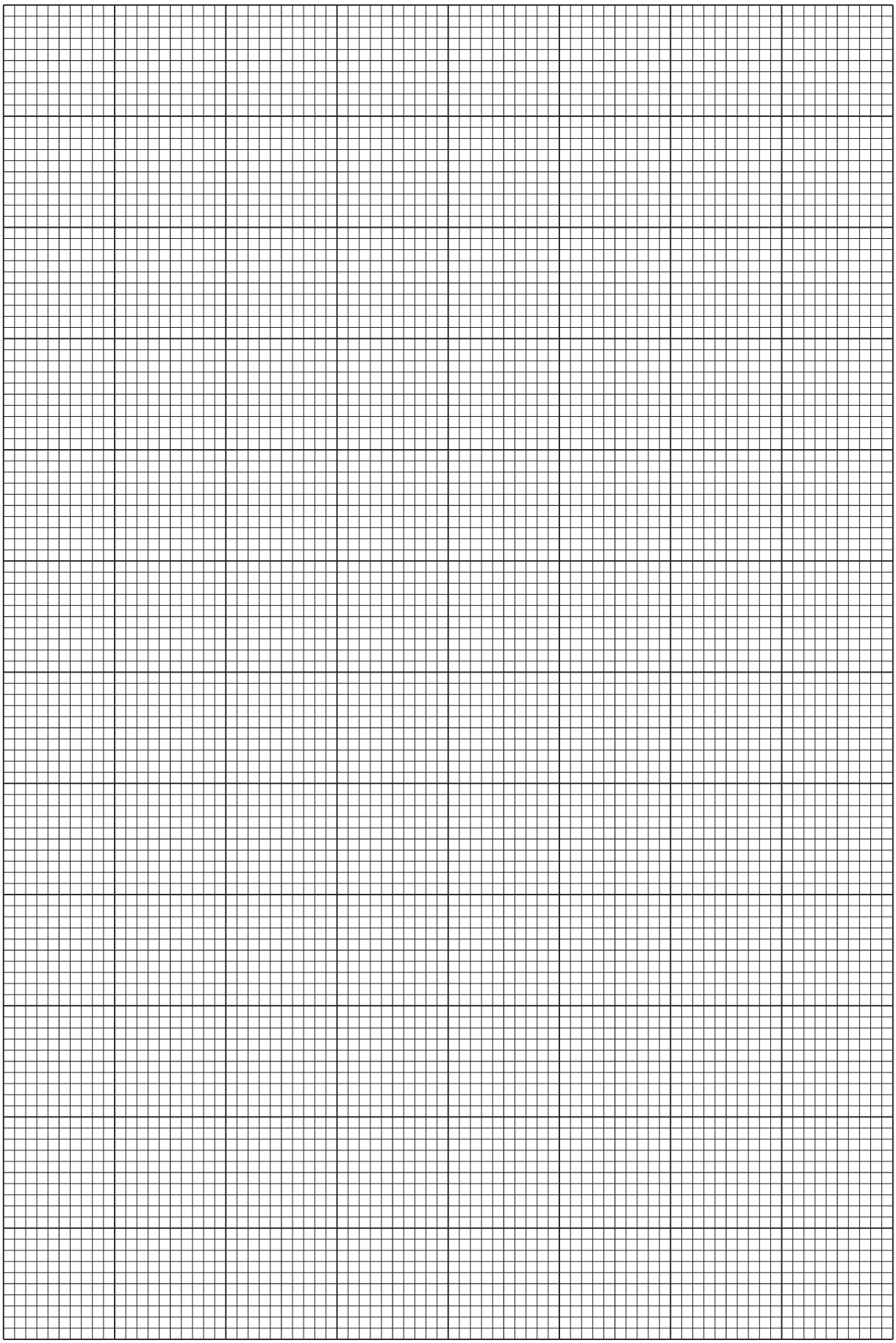

(e) The quantities e and m are related by the equation

$$e^2 = -Pm^2 + Q$$

where P and Q are constants.

Use your answers in **(d)(iii)** to determine the values of P and Q.
Give appropriate units.

P = ...

Q = ...

[1]

(f) The mass M of X is given by

$$M = \sqrt{\frac{Q}{P}}.$$

Use your answers in **(e)** to determine the value of M.
Include a unit for M.

M = ...[1]

You may not need to use all of the materials provided.

2 In this experiment, you will investigate the motion of a hacksaw blade supported by a G-clamp.

(a) Using the Blu-Tack, attach the two slotted masses as close as possible to one end of the hacksaw blade, as shown in Fig. 2.1.



Fig. 2.1

(b) (i) Set up the apparatus as shown in Fig. 2.2.

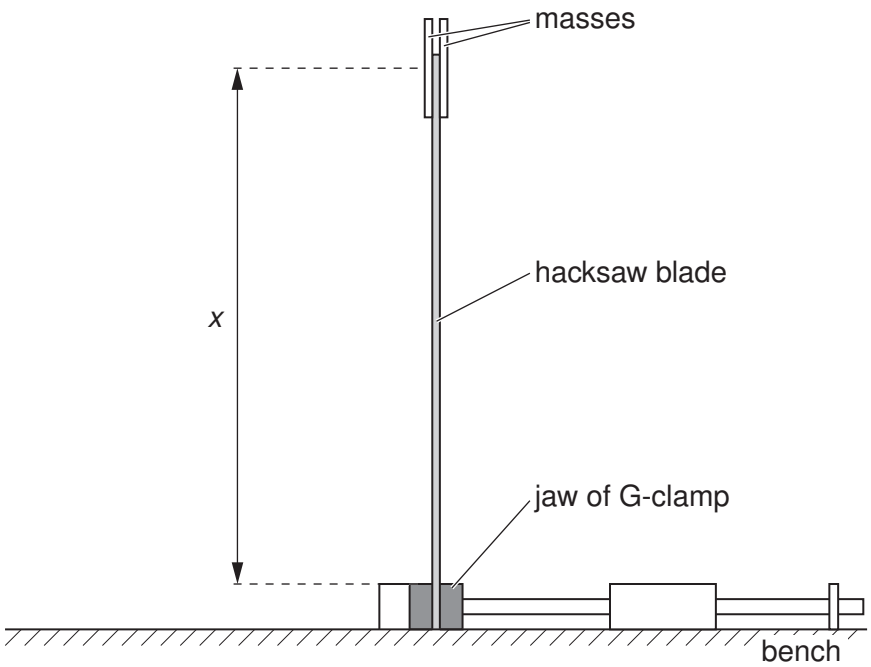

Fig. 2.2

(ii) Measure and record the distance *x* between the top of the jaw of the G-clamp and the centre of the masses, as shown in Fig. 2.2.

x = ...[2]

(iii) Estimate the percentage uncertainty in your value of x.

percentage uncertainty = ...[1]

© UCLES 2014

(c) (i) Gently displace the top end of the hacksaw blade to the left.
Release the blade and watch the movement.
The blade will move to the right and back towards the left, completing a swing as shown in Fig. 2.3.

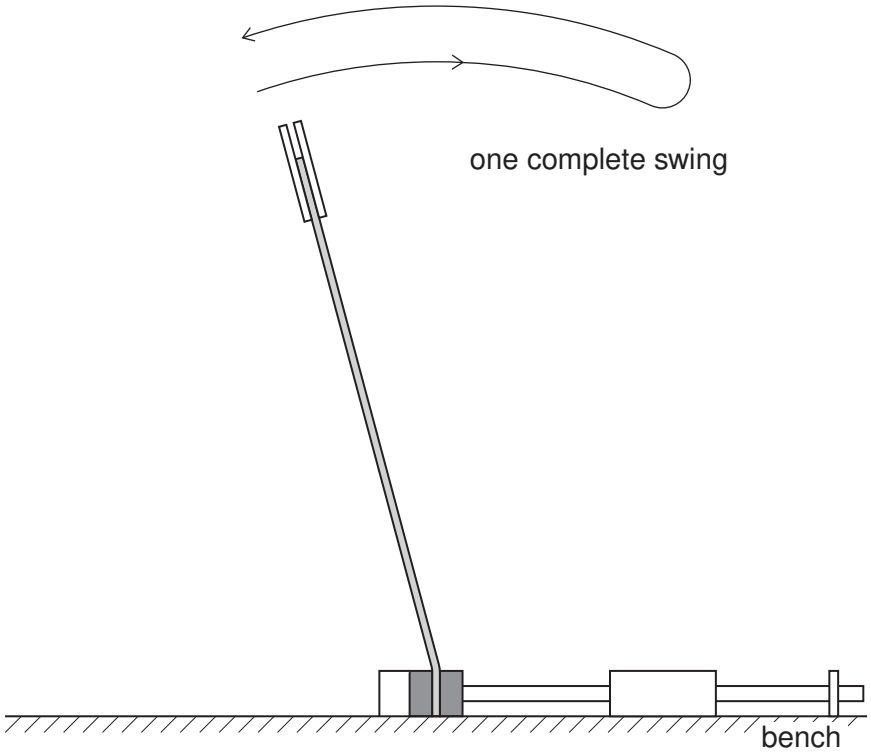

Fig. 2.3

(ii) The time taken for one complete swing is T.
By timing several of these complete swings, determine an accurate value for T.

T = ...[2]

(iii) Calculate the frequency f of the swings where $f = \frac{1}{T}$.

f = ...Hz [1]

(d) (i) Reduce x by attaching the masses to another position on the hacksaw blade.

(ii) Repeat **(b)(ii)** and **(c)**.

x = ...

T = ...

f = ...Hz

[3]

© UCLES 2014

(e) It is suggested that the relationship between f and x is

$$f^2 = \frac{k}{x^3}$$

where k is a constant.

(i) Using your data, calculate two values of k.

first value of k = ...

second value of k = ...

[1]

(ii) Justify the number of significant figures that you have given for your values of k.

.....

.....

.....[1]

(iii) Explain whether your results in **(e)(i)** support the suggested relationship.

.....

.....

.....

.....[1]

(f) (i) Describe four sources of uncertainty or limitations of the procedure for this experiment.

1. .....

.....

2. .....

.....

3. .....

.....

4. .....

.....

[4]

(ii) Describe four improvements that could be made to this experiment. You may suggest the use of other apparatus or different procedures.

1. .....

.....

2. .....

.....

3. .....

.....

4. .....

.....

[4]

Permission to reproduce items where third-party owned material protected by copyright is included has been sought and cleared where possible. Every reasonable effort has been made by the publisher (UCLES) to trace copyright holders, but if any items requiring clearance have unwittingly been included, the publisher will be pleased to make amends at the earliest possible opportunity.

Cambridge International Examinations is part of the Cambridge Assessment Group. Cambridge Assessment is the brand name of University of Cambridge Local Examinations Syndicate (UCLES), which is itself a department of the University of Cambridge.